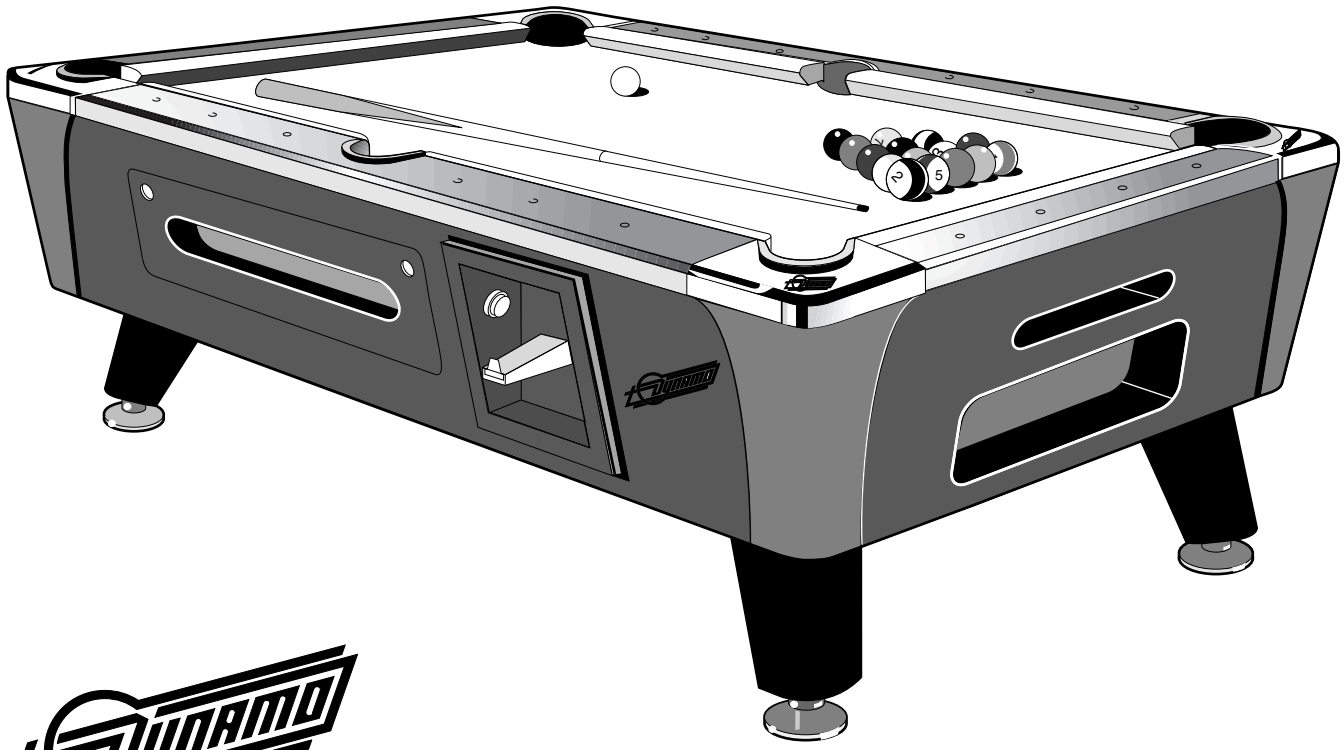

Dynamo

1998

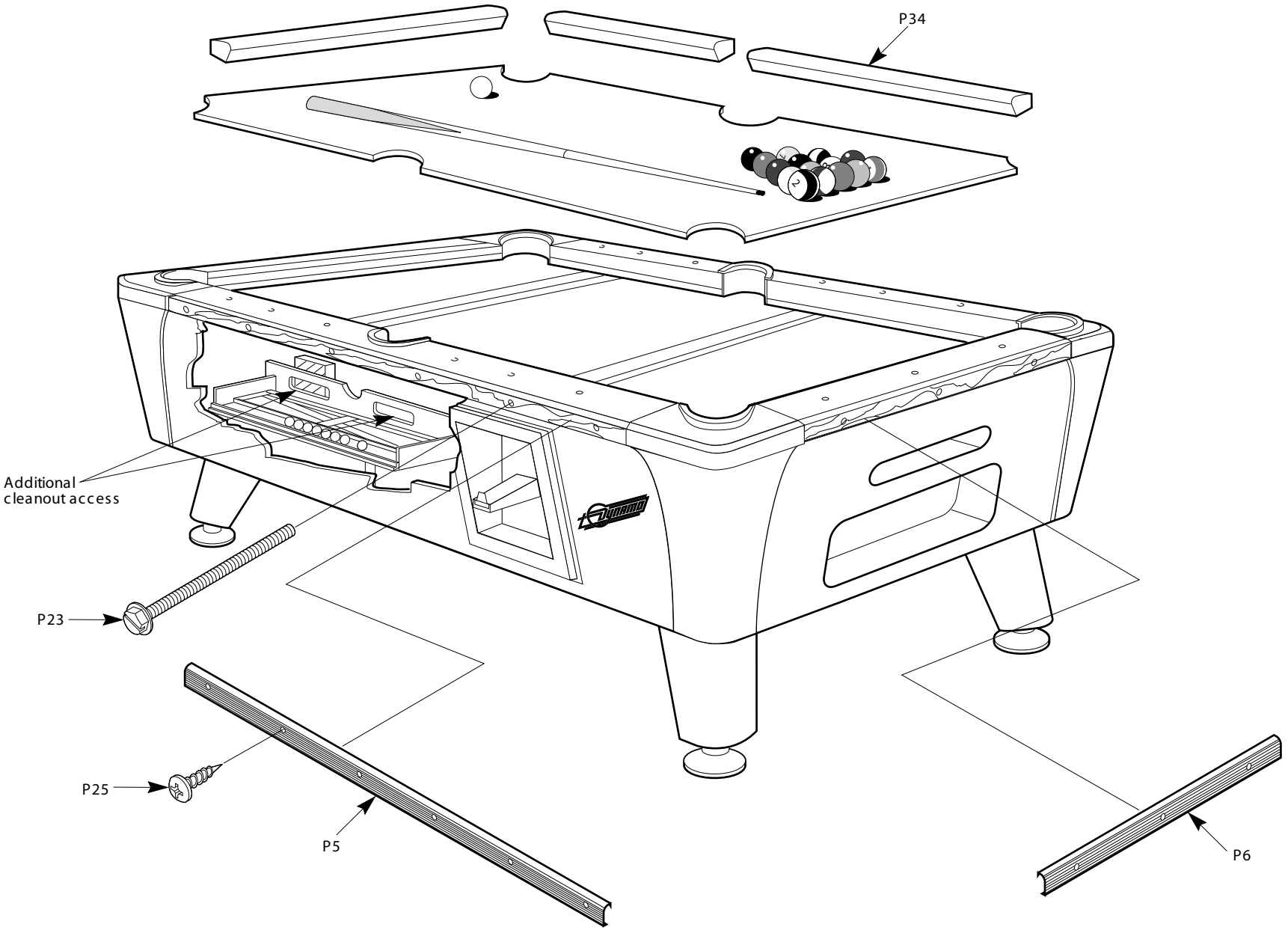
P34
Additional
cleanout access
P23
P25
P5
P6

Felt Replacement

The felt used on your pool table is the fastest and longest lasting felt we have found in the market place, but no matter how good the felt is it will need to be replaced over time. The length of time will very greatly from location to location due to the amount of play and the players themselves. An example would be if you have players that hit the felt with the cue stick often.

With that in mind we have put together a set of instructions on how to recover the slate and cushions (bed & rail cloth).

For The Slate

1. Remove the screws (P25) that hold the side and end trim (P5-P6) pieces in place.
2. Remove the side and end trim (P5-P6). To do this, slide the trim toward one of the corner castings (P4). Then you will need to pull it up and out at the same time.
3. Remove the cushion bolts (P23).
4. Remove the cushions (P34). If you are doing more than one table at a time we recommend that you tape each set together to prevent getting them mixed up per table. Depending on the age and make of your tables the cushions can vary.
5. Remove the shims along the sides of the slate (Note they are glued in place). Mark the number of shims you remove and the position of the shims on the wooden side of the rails (P35-P36). **It is very important that you replace the shims as removed, if you do not the rails will warp over time.**
6. With 2 or more people remove the slate and set it on a raised and sturdy platform giving you at least 6” of room to work on the bottom of the slate.
7. Cut the top of the felt in an X shape from corner pocket to corner pocket. Then pull one section at a time toward the edge and remove by pulling toward yourself and down as the felt comes to the bottom edge. **Be careful not pull the felt so fast or hard that the slate falls off of the platform.**
8. Lay the new felt on top of the slate and line it up so that it is even on the sides and ends.
9. Roll the edges of the felt on top of the slate about 6 inches all the way around the slate.
10. Apply contact glue to the edge and about 4” of the bottom side of the slate; also apply the glue to 5” to 6” of the backside of the felt you have folded over.
11. Go to one end of the slate and roll the edge of the felt down and with your hand create a crease while applying it against the edge of the slate.
12. Cut the felt diagonally from the bottom of the leading edge of both of the corner pockets all the way to the end of the felt. (You should end up with a square flap hanging off of the end of the slate.)
13. After trimming off any felt longer than 4” apply it to the bottom of the slate.

14. Go to the opposite end of the slate, lift the felt slightly and pull it tight toward your self making sure there are no creases or wrinkles on the playing surface. Again using your hand create a crease on the top edge of the slate while applying the felt to the edge.
15. Follow Step 12 for this end as well.
16. After trimming off any felt longer than 4" apply it to the bottom of the slate.
17. Go to one side of the slate and roll the felt over onto the slate. With your hand make a crease along the upper edge of the slate all the way down the side.
18. Cut the felt diagonally from the bottom of the leading edge of both of the corner pockets and side pocket all the way to the end of the felt. (You should end up with 2 square flaps hanging off of the side of the slate.)
19. After trimming off any felt longer than 4" apply it to the bottom of the slate.
20. Pull the felt slightly down and under at the same time and apply it to the bottom of the slate.
21. Follow steps 18 and 19 again for the final side.
22. Go to one of the corners on the final side. From here you will need to pull the felt tight toward yourself with one hand, use your other hand to form a crease at that point on the top edge then fold it all the way over and apply it to the bottom of the slate. You will need to continue this all the way down this side of the slate. Be sure to pull all wrinkles out of the felt during this process.
23. You will need to cut three slits in the felt on the corners and five slits on the side pockets (see the diagram 850201670). These cuts will allow the felt to mold around the slate in the pockets.
24. On each pocket you will need to pull each piece of the felt tight and fold it and apply it to the bottom of the slate. After all of the felt in the pocket has been folded over apply a strip of tape over all of the strips. We recommend a tape with nylon threads running through it.
25. With two or more people lift the slate off of the platform and lower it into the table.
26. Replace the shim around the slate. Be sure to replace exactly as they were removed. If you did not mark them as instructed or the paper you wrote it on is missing, all is not lost. The most important thing about the shims is that the rails are firmly spaced away from the slate evenly. Do this by using the same number of shims along the length of the rail. Each side has four positions for the shims and each end has two. The positions are all located about 2" away from pocket. To explain it further, on the front side (the side with the ball view door and coin door) if you have two thick and one thin shims in one of the 4 positions you must have exact configuration of shims in the other 3 positions. At the same time if you had two shims on 1 of the positions on the backside rail you must use two shims in the other 3 position. The same is true for the end rails. I suggest you place the end shims in first to line the slate up with the side pockets and then the side rails. On the last side rail you may need to pry the slate away from the rail to be able to insert the shims beside the center pocket. When doing this use the widest and flattest pry bar you can find. Take care not to put a dent in the rail or chip the slate.
27. Follow steps 1 – 4 in reverse to complete the job.

For The Cushions

1. Remove the screws (P25) that hold the side and end trim (P5-P6) pieces in place.
2. Remove the side and end trim (P5-P6). To do this, slide the trim toward one of the corner castings (P4). Then you will need to pull it up and out at the same time.
3. Remove the cushion bolts (P23).
4. Please take a minute to become familiar with the placement of the cushions. The ends on each of the cushion are the keys to this (Drawing # 850201660).
5. Remove the cushion (P34). If you are doing more than one table at a time we recommend that you tape each set together to prevent getting them mixed up per table. Depending on the age and make of your tables the cushions can vary.
6. To start off precut the felt 6' wide and about 8' longer than the cushion.
7. Place both ends of the felt into some water to soak. You need about 4' per end. The reason for the water is that the felt will shrink when dry and will make a much tighter and smoother fit.
8. Remove all of the staples from the backside of the cushions, and peel off the felt.
9. Take one of the felt strips out of the water and lay it flat and face down.
10. Place one cushion on top of the felt centered.
11. Spray a contact glue on the back of the cushion and about 2" of the felt length wise stopping at the end of the cushion leaving about 4" of each end of the felt without glue.
12. Fold the felt from the bottom edge onto the back of the cushion.
13. Pull the felt tight and fold over the top edge onto the cushion (Make sure there are no wrinkles or creases).
14. On one end of the cushion pull the felt up as tight as possible and over the end.
15. From the right edge pull the felt over as tight as possible the upper edge of the felt should be at a 45-degree angle to the top edge of the cushion. Secure it with about 4 to 5 staples about ½" from the side. Cut the excess felt off so that it only comes to about the center of the cushion.
16. Repeat step 15 with the left side.
17. Repeat steps 14 – 16 for the other end.

You will need to repeat steps 9 – 17 for all of the cushions and reverse steps 1 – 4 to reassemble the table.





1. Lay the slate down on a sturdy structure that gives you access to the bottom of the slate.
2. Wipe the slate surface off and inspect for dents and foreign debris.

3. Position the felt over the slate with 3” to 4” of excess felt bordering the slate.





4. Spray or spread the adhesive in a three to four inch band to the bottom of the slate and border of the felt that hangs over the slate edges.





5. Stretch one end of the felt and fold it to the adhesive.





6. Move to the Opposite end of the slate and pull it tight. It you find you have more than 3” to 4” trim off the excess. While pulling crease the felt to the top edge and then fold it over on to the adhesive.





7. Move to one side of the slate and stretch the felt tightly, then fold it over onto the adhesive.





8. Move to the opposite side of the slate and lift and pull tight. Then holding the felt press it onto the edge of the slate. Cut off the excess felt. Then again hold the felt tightly and pull it down and onto the adhesive.



9. Cut the Felt diagonally back from the corner pockets with a utility knife. With a utility knife or scissors, cut the felt on a radius at the corner pockets and slice within 1” of the slate. (Caution: Do not slice the felt to close to the slate.)





10. Pull the tabs tight and fold onto the adhesive.





11. Cut the Felt diagonally back from the center pockets with a utility knife, with a utility knife or scissors, cut the felt on a radius at the center pockets and slice within 1” of the slate. (Caution: Do not slice the felt to close to the slate.)



12. Pull the tabs tight and fold onto the adhesive.

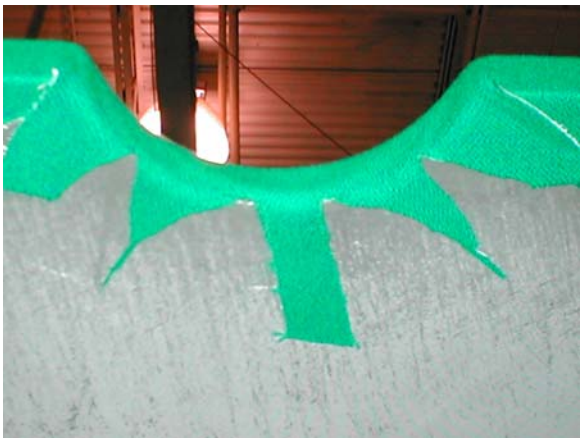

13. Using a nylon tape 2” wide tape over the tabs at each pocket to guarantee a tight hold.



