VALLEY-DYNAMO FAQ GUIDE TO OLDER VALLEY POOL TABLES
December 2024 UPDATE

If you call or e-mail the general help line and say "I have some questions about my old table…" we will send you to this page first.

What do I have?

- *ABOUT VALLEY AND DYNAMO AND VALLEY-DYNAMO*
- *DOES THIS LOGO MAKE IT A "COUGAR" OR "PANTHER" TABLE?*
- *WHAT SIZE IS MY TABLE? WOULD YOU HAVE A CHART? (and about the term "bar sized")*
- *HOW DOES SIZE MATTER WHEN IT COMES TO PARTS?*
- *HOW OLD IS MY VALLEY TABLE and LIST OF VALLEY SERIAL NUMBER FORMATS*
- *ABOUT PATENT NUMBERS 3362710 AND 3738655*
- *MY TABLE IS OLDER, WHERE CAN I FIND MY TABLE'S MODEL NUMBER?*
- *WHY CAN'T YOU LOOK UP WHO ORIGINALLY OWNED MY TABLE?*
- *I HAVE AN OLD VALLEY TABLE IN PRETTY GOOD SHAPE, WOULD YOU WANT TO BUY IT BACK?*
- *DO YOU KNOW WHO MIGHT?*
- *HOW MUCH IS MY TABLE WORTH? C'MON, I JUST WANT A BALLPARK GUESS.*

Can you help me restore this table?

- *CAN YOU HELP WALK ME THROUGH RESTORING MY TABLE? OK, THEN WHO CAN?*
- *DESPITE YOUR WARNINGS I WILL RESTORE THIS TABLE. HOW DO I REPLACE THE LAMINATES?*
- *COULD MY TABLE BE RARE AND VALUABLE ENOUGH TO RESTORE TO NEW CONDITION?*

What 's the parts situation?

- *COULD YOU SEND A PARTS BREAKDOWN SPECIFICALLY FOR MY TABLE?*
- *CAN I SEND YOU A PHOTO OF MY TABLE AND YOU TELL ME WHAT TO ORDER*
- *HOW BIG OF AN ISSUE IS PARTS AVAILABILITY WITH VALLEY TABLES?*
- *COULD YOU CHECK TO MAKE SURE YOU DON'T HAVE A STILL AVAILABLE?*
- *OK, I GET IT, YOU DON'T HAVE THIS PART. DO YOU KNOW WHO* WOULD *HAVE IT?*
- *DO YOU STILL STOCK THE OLD LOGO PLATES, (SUCH AS THE OLD WINGED LOGO)?*
- *DO YOU OFFER KITS TO REFINISH THE LAMINATE ON A TABLE?*
- *ARE TOP LAMINATES WITH DIAMOND MARKERS AVAILABLE FOR MY TABLE*
- *CAN I GET A REPLACEMENT BOARD FOR MY ICT-equipped GREAT 8 POOL TABLE?*
- *CAN I GET A REPLACEMENT BOARD FOR MY JCM-equipped GREAT 8 POOL TABLE?*
- *CAN I ADAPT PARTS FROM THE CURRENT VALLEY-DYNAMO DBA TABLES TO WORK ON MY VALLEY LEOPARD OR EARLY DYNAMO DBA TABLE?*
- *DO YOU SELL A KIT TO ADD A DBA TO MY PUSH CHUTE VALLEY POOL TABLE?*
- *CAN I GET PARTS FOR A VALLEY LEOPARD OR LYNX WITH THE UNITIZED SERVICE DRAWER?*
- *I HAVE AN OLDER MODEL VALLEY BUMPER POOL TABLE; CAN I GET PARTS?*
- *WILL CUSHION RAILS FOR CURRENT BUMPER POOL TABLES FIT MY TABLE?*
- *CAN I STILL BUY ROUND CORNER CASTINGS?*
- *CAN I STILL GET CHROME CORNERS?*
- *DO YOU KNOW ANYONE WHO STILL HAS ROUND CORNER CASTINGS?*
- *CAN I INSTALL PANTHER CORNER CASTINGS ON MY OLDER MODEL TABLE?*
- *WHY CAN'T I GET THE 4" POCKET LINERS?*
- *DO YOU STILL HAVE THE SPIRAL NAILS YOU USED TO USE TO SECURE THE POCKETS?*
- *DO YOU HAVE ANY OF THE OLDER SIDE TRIM PIECES WITH FEWER/NO GROOVES?*
- *HOW COME THE SIDE TRIM HOLES DON'T MATCH UP ON MY TABLE?*
- *I WANT TO MOVE MY TABLE, HOW DO I DO IT AND DO I TAKE IT APART?*
- *WHAT KIND OF CUE BALL DO I NEED?*
- *CAN I PURCHASE A COMPLETE SIDEWALL OR ENDWALL?*

- ***WHAT LAMINATE COLORS ARE CURRENTLY AVAILABLE***
- ***DO YOU HAVE SAMPLES OF DISCONTINUED LAMINATE COLORS?***
- ***CAN I GET A REPLACEMENT VALLEY COIN DOOR OR PARTS FOR THE COIN MECHANISM?***
- ***CAN I STILL GET A COIN MECHANISM THAT LOOKS LIKE THIS PHOTO?***
- ***COULD I GET A KEY FOR MY OLD COIN DOOR?***
- ***HOW CAN I CHANGE MY COIN-OP TABLE TO FREE PLAY?***
- ***COULD I GET A KEY FOR MY BALL VIEW DOOR OR CLEAN OUT DOOR?***
- ***YOU DON'T HAVE SLATES OR CENTER CHUTES ON YOUR WEBSTORE, HOW CAN I BUY ONE?***
- ***CAN I GET QUOTE FOR A NEW SLATE TO SEND TO MY INSURANCE COMPANY?***
- ***WOULD YOU HAVE ANY USED SLATES (or other items)?***
- ***WHERE DO YOU LIST FAQ's ABOUT CUSHION RAILS?***

What about non-Valley tables?

- ***ABOUT BRUNSWICK POOL TABLES***
- ***DO YOU HAVE PARTS FOR THE* BRUNSWICK METRO COIN?**
- ***DO YOU HAVE INFORMATION OR PARTS FOR A DIFFERENT MANUFACTURER'S OLDER MODEL POOL TABLE? WILL YOUR PARTS FIT THEIR TABLE?***
- ***CAN I ORDER FROM YOUR SITE?***
- ***HOW CAN A DISTRIBUTOR OR OPERATOR ACCESS YOUR WEBSTORE?***

A THANK YOU TO THE USER – for taking the time to review this document. We have gone to great lengths and grilled longtime employees for years to provide this resource. Some people call or write immediately, no looking, no checking, not even visiting our web site. You CARE and are eager to learn, and we hope the past DECADE of refining this document in response to additional questions (this is the 50th revision) will help. THANKS.

This document exists to address the many, many, many, many, many inquiries from those customers who found an old table, or bought one, or had it in the family for generations. We have tried to post most of the answers you are looking for because we have a small staff kept busy with the manufacture and shipment of new products, only TWO of whom were with Valley before the company's move to Texas in the late 1990s.

We address RESTORING A TABLE in greater detail on the page but must stress that we are an active business building new products daily without the resources or staff to assist with old table restorations. We respond to many inquiries starting with "I just got this old table…" with a link to this document instead of a call or reply. Not trying to be rude, but hopefully it makes sense that our current priorities are filling parts orders for new products and active dealers and not discussing the esoteric details of restoring and adapting parts to fit a table built in 1972 someone purchased used for $300.

OUR WEBSTORE: Most frequently used parts, many rarely used items that someone asked for once or twice, and some CLOSEOUT AND FACTORY SECOND ITEMS are available on our Webstore. The parts breakdowns are the best way to determine if a part is still available, and we suggest using the "SEARCH" function because it really does work!! CLICK HERE if you wish to purchase a part you think is available, but you just can't find it on the site. There is a minimum order on the Webstore of around $30.00, which should suit most minor rehab and restoration projects just fine but might be tough if you want just one pocket liner or a lock. As a manufacturer we've got overhead to cover.

Here's where someone usually brings up "*But I only paid $100 for the table!*" The prior owner probably sold the table for $100 because they determined it was less trouble to just get a new table than invest in fixing a 30 or 40 or 50 or even 60 year old table with new parts. The same cushion rails go on a new table and a 30 year old table, the same labor and parts go into both, the price is the same whether the table was bought new for $xxxx or used for $100. Unfortunately, you may quickly learn that $100 table was no bargain – parts to restore it are either expensive or discontinued.

"CAN'T I JUST CALL IN AND ORDER PARTS?" We prefer using the WebStore for 8 GREAT REASONS:
* A picture is worth 1000 words – see the part and usually see some measurements. Since there are no refunds—only credits—on the Webstore *(note reason #2)*, it is often very critical to SEE the part before ordering it. Because it has been a problem, when ordering any part where color is subjective (doors, laminates), it is **COMPANY POLICY** we

only accept WebStore orders. You see a photo of the part and our disclaimers. NO PHONE ORDERS means no "I need to return this part for a refund, it's a different color brown from what I described to you and the holes are in a different place…"
* There is some "fine print" when it comes to placing an order, returns, non-returnable items, credits, shipping, etc. We want to make sure you have a chance to read it so there are no unpleasant surprises later. This isn't like shopping at the hardware store down the block, there are **no refunds** and credit takes some special work. DO NOT just send parts back.
* You know your address better than anyone. No chance we heard something wrong
* Your credit card information stays secure. We never see it and it's not going to get pulled out of a dumpster someplace
* or you can pay with PayPal and not have to let us know your PayPal login information.
* You know the charged amount immediately. Otherwise we must pack your order to know the shipping amount
* You get instant confirmation the order was placed, when it ships, and the tracking number
* And while we understand this is a necessary evil of today's technology people hate; to keep prices reasonable, we simply can't justify sitting someone daily at a desk for the sole purpose of answering a phone taking parts orders and manually processing credit cards hoping orders come in. See above, staff is limited.

When someone tries to describe what they are looking for and it ends up being a different part, it's a colossal headache for everyone—you included-- returning and shipping additional parts. C'mon, if my 80-year-old Dad can order stuff on his computer, so can you.

Nobody really likes incorrect addresses, wayward credit card information, not knowing the return policy, and not seeing photos of what you're ordering. And, always keep in mind what we call the "after it leaves our dock" rule. We know are what these tables looked like, worked like, etc. when we shipped them. Any parts we send will be for the table "as it left our dock." It's anyone's guess how they were repaired or modified once sold.



"I HAVE A VALLEY-DYNAMO POOL TABLE…" No, you don't. Just like nobody went to this dealership and bought a Buick-Pontiac-GMC car. Valley and Dynamo tables are separate products. Since Valley and Dynamo merged in the late 1990s we've tried to share some components and hardware like leg levelers or push chute extensions, but the tables were designed separately by competitors. Before you contact ANYONE, or attempt to order ANY parts, confirm if your table is a Valley or Dynamo. It may be very important. (hint: All Dynamo corner castings say "Dynamo")



MY TABLE HAS THIS LOGO, SO IT'S A PANTHER (or insert cat name here: Cougar, Leopard, Lynx, Bobcat, Black Cat, Top Cat, Fat Cat, Jaguar, Tiger, Puma, etc.)? This exact logo has been used on numerous models named for several cats over several decades – most notably the Cougar. Year of manufacture and size determine the model of your table. If your table isn't less than 10 years old it is ***definitely not*** a Panther. THIS CAT IS NOT A PANTHER, nor is it a Cougar, it is a cat. Let's be very clear on this because when the Panther was introduced in 2009 it featured many parts that ONLY fit Panther tables. If you think that cat on your 1982 table is a Panther and order Panther parts, there will be problems.



A Ford with a horse… not always a Mustang.





SO WHAT MAKES A TABLE A PANTHER?
The 2009 modifications to the coin table (and later on to the non-coin home model tables) signify the Panther. One of the most identifiable changes is the corner.
The corner on the left is a Panther. The corner casting design keeps it flush with the top rail, and the pocket is countersunk so it is also flush.



The corner on the right is the ZD-7 Cougar. Note how the corner casting sits on the top rail, and the pocket sits on the casting.

Note how both corners have a round logo cast into them. As discussed previously - same cat. Cougar, Panther, doesn't matter. Cat's identical.

We know someone's going to ask. No, we had to change the top rail shape and the mounting points with the corner redesign, so you can only use Panther corners on a Panther table.

HOW DOES SIZE MATTER WITH REGARD TO PARTS?:



These items' sizes do not change with regard to your table's size:

- COIN BOX HOUSING
- PUSH CHUTE TRAP

Hint: trap size has nothing to do with table size but everything to do with the width of 15 pool balls

- MAGNETIC SEPARATOR PARTS
- Anything relating to CORNERS
- LEGS and LEG LEVELERS
- Coin Door, BALL VIEW DOOR, CLEAN OUT DOOR

But these items will *absolutely* differ according to table size:

- CUSHION RAILS
- Slate and Center Chute
- SIDE AND END TRIM *(but longer trim can always be cut to fit shorter tables)*
- TOP RAIL LAMINATES *(these cannot be cut down, because of the markers)*

WHAT SIZE IS MY TABLE? There *are* different sizes. People throw around the term "bar box" or "bar sized", but there is no such thing. Are all bars the same size?

Avoid inconvenience, returns, restock fees and additional shipments; **be absolutely sure of your table's size before looking for parts**. You cannot say "You know, it's a bar table." We don't know. Trust us, there are different sizes. Don't just say "it's a 7-footer" because your tape measure says 7-feet. Are we talking playing area, overall length, slate size? Our 8-foot table has a 7-foot *ish* playing surface, and the cabinet of our 6½-foot table measures more than 7-feet end to end. Check the chart and Measure! Measure! Measure! Please ask if you are not sure.

Behold our ultimate size chart:

What we call it:	101	93	88	85	78
(because from end-to-end it measures)	101"	93"	88"	85"	78"
(and this wide)	57¼ ”	52¾”	50”	49”	45"
we also call it	8-foot	7-foot	6½ foot	6½ foot or 6-foot or "New Yorker"	6-foot
playing surface	44" x 88"	40" x 80"	37" x 74½"	36" x 72"	32½" x 65"
slate size	47½" x 91½"	43" x 83"	40¼ " x 77½"	39"x 75"	35½" x 68"
slate thickness	⅞"	¾"	¾"	¾"	¾"
Approximate Cushion Rail Width (at widest point)	40"	36"	33½"	32"	28½"
Approximate length of side trim	82¼ "	73¾"	68¼ "	65¾"	58⅝"
Approximate length of end trim	38¼ "	33¾"	31"	29¼ "	26⅛"
In the current model number format, the third letter is:	A	B	C	D	E
Model number from the 1970s-1980s is formatted as	4#	3#	2#	1#	1#
Currently produced	Yes	Yes	Yes	No	No

Prior to 1964 there were some really odd dimensions used – 75”, 70”, etc. We don’t cover those here because parts have not been available for those tables since 1986 and never will be again. The one exception to the “ask” thing is a situation where if your table measures 100¼ ” end to end, we’d consider it a “101”. Fractions of an inch are not critical, several inches are. Some folks measure with rail trim ON the table, some OFF, some on one side, some only on the sides…

HOW OLD IS MY VALLEY TABLE? Inside of the Ball-View Door (with the Plexiglas window) and occasionally stamped or even written underneath the table is the Serial Number.

Our Valley Serial Number Cross Reference can usually give you a close estimate of your table’s age, as can a trip through our Discontinued products Photo Gallery on Flickr.



There have been many variations through the years. On this mid-70s Model 25 is visible as well as the Serial Number tag, On the Model 25, the serial number tag is circled in yellow. Tags sometimes fall off so sometimes that information is just lost forever to history. But note here: that “Model 25” tells us a ton more about that particular 6½ foot Pecan-laminate table built between 1975-1977 table than the serial number – see what we did there.

As the Serial Number cross-reference page AND the photo at the right show, sometimes the Serial Number was written in marker inside or beneath the table itself. Exactly why you

should consult the cross-reference: It shows all the FORMATS used through the years. This way you can determine if that crazy combination of numbers and letters on the table is important, or just something someone just wrote or stamped on it during the last 40 years.



No question about any table should ever begin with "My pool table is kind of a brown, wood-grain color…" Factor out Black Cats and anything with a Cheyenne Leather finish and close to 98% of all Valley tables ever built are "kind of a brown, wood-grain color". Before contacting us, *please* try to get some idea of your table's age. Looks can deceive. Some well-preserved tables (in a "brown, wood-grain color") are much older than you might think, and some recent "high mileage" tables will appear old beyond their years. Absolutely know your table's age to help determine if it's even worth contacting us (see below).

The "**once it left our dock**" rule again comes into effect here. They could be any number of tax stamps, property ID stickers, license numbers, etc. affixed to the table over the course of decades. Folks actually contact us hoping we can explain the origin of the different stickers on their table. Sorry, aside from the Serial number and Model Number (if present – and like we just said, they might not be there) we simply do not know.

THERE'S A PLATE ON MY TABLE THAT LISTS A PATENT NUMBER, LIKE "PATENT NUMBER 3362710" or "PATENT NUMBER 3738655", DOES THAT HELP? It does not. Patent 3362710 refers to the magnetic separator Valley still uses today in much the same format. The patent was filed on July 5, 1962 and issued Jan 9, 1968. We assume the number was referenced starting with the introduction of tables with magnetic cue ball separators. Patent number 3738655 refers to a magnetic cue ball, filed on Aug 17, 1970 and published on Jun 12, 1973.

We do not have any reliable records of when Patent number references on the tables started or stopped.



WHERE CAN I FIND MY TABLE'S MODEL NUMBER? Before you get focused on your table's model number, understand that model numbers were *very* hit and miss over the years. The photo at the left shows a very faded model # 510939 on a table built in the early 1970s, stamped in the ball trap area directly below the center pocket. On the right is a photo of a Model 1877. We're not sure where that's stamped from the photo. On the previous page you see a table stamped Model 25 in the same area. But for many older tables, model numbers were never actually put on the table, or are even more faded than this, or on a tag that might have fallen off years ago… and that's because the model number may not be important. The SIZE and AGE of your table will be more crucial than knowing for sure if your table is a Model 39 or Model 35.



WHY CAN'T YOU LOOK UP WHO ORIGINALLY OWNED MY TABLE? For some old tables we had this information, but we received feedback from companies named in the information about

people calling very persistently, relentlessly, and VERY rudely demanding—not requesting, demanding--information about (or the keys for) a pool table their company might have purchased April 17th, 1968 and sold on April 18th. "Valley said you bought this table…" A few bad apples messed it all up and **starting in 2011** (that's over 14 years now) we **officially** stopped providing that information. Remember, people were not contacting the first bar the table was in, but the Distributor who bought that table who immediately sold it to an Operator who placed it on a route that included that first bar. That Distributor may have only "owned" that table for a few hours.



"This guy wants the keys to our old pool table?"

"Charlie, we gave that away before you were born."

I HAVE AN OLD VALLEY TABLE FROM (many years ago) IN PRETTY GOOD SHAPE, WOULD YOU WANT TO BUY IT BACK FROM ME FOR DISPLAY? No thanks, we simply don't have the space. Also, we are a production facility so we don't have a lot of visitors to justify a showroom.

DO YOU KNOW WHO MIGHT WANT IT? Only by contacting Dealers directly can you find the answer to that. Some will take old equipment in trade, others will not. When you are talking about tables more than 40 years old, it might be best to check with the nearest Antique Furniture Consignment place to see if they are open-minded about pool tables.

HOW MUCH IS MY TABLE WORTH? This is covered in great depth elsewhere on the FAQ Home Page. The "**OFFICIAL COMPANY STATEMENT**" is:

As a manufacturer of new tables, we have no involvement in the market for used or collectible tables. IT IS COMPANY POLICY NOT TO COMMENT OR SPECULATE ON THE VALUE OF OLDER TABLES AND OFFER NO SUGGESTIONS ON PRICING OR VALUE.



HOW CAN I GET THE PERSONALIZED ATTENTION NEEDED TO DO A COMPLETE RESTORATION OF A TABLE? Although our Parts and Tech departments are knowledgeable and can provide a great deal of assistance, **we are also heavily involved in the manufacture and service of brand-new tables**.

A BIG REASON WE CREATED THIS PAGE HAS TO DO WITH MANY HOURS-LONG CALLS FROM PEOPLE WANTING TO RESTORE OR REFURBISH A VERY OLD TABLE THAT COULD ALMOST ALL BE ANSWERED WITH THE INFORMATION CONTAINED HERE. It simply isn't fair to our current customers who've recently purchased new products that we have to spend half a day with multiple calls and e-mails explaining in many different ways to someone with a 60 year old table that we haven't had parts for their table in 40 years or schematics for 25 years and wouldn't know who does.

We flinch a little at "that call" where someone says they're going to restore a table, asks numerous questions, and hopes we can walk them through it. We are a manufacturer of new tables, not a restoration business. Before you jump into a project, know your table's age and size, thoroughly study the helpful resources on our site to know if parts availability is going to be an issue, and evaluate the table's condition to know its biggest problem areas. If you contact us, we can answer a few questions, we can help guide you in the right direction, but we cannot provide step-by-step instructions, or a complete shopping list, or take ANY VERBAL PARTS ORDERS. Sometimes you need someone local or close by who can see things first hand, or that you may need to buy a lot of parts from piecemeal. Here is a link when you can Locate a Distributor who can provide assistance to you. And realize there's nobody left here who was building or working on tables in the 1970s. Those people, by now, are (hopefully) enjoying retirement.

The "OFFICIAL COMPANY STATEMENT" is:

As a manufacturer of new tables what we do on our production line is of no help to what needs to be done to restore or recondition a years-old or sometimes decades-old table from any of our product lines (Valley, Dynamo, Tornado, Champion, Connelly).
IT IS COMPANY POLICY NOT TO COMMENT OR SPECULATE ON PARTS, TECHNIQUES OR LABOR THAT MAY BE NEEDED TO FIX UP OR RESTORE OLDER PRODUCTS.
Local game dealers or furniture experts are your best option. Be advised that photos or verbal descriptions will not be sufficient. In-person inspection is a must for anyone to assist you with any restoration or reconditioning project.

For a last helpful tip, if you can buy one table really cheap, it's not that much more to buy two. And between the two you really need only one intact slate. After a bit of work you can combine all the good parts to make one good, functional table; and a pile of scraps for bulk trash day.

COULD MY TABLE BE RARE AND VALUABLE ENOUGH TO RESTORE? We have sold many thousands of tables over the years. From a collectibles standpoint, a 100% restored vintage Valley or Dynamo pool table is not a "winning lottery ticket." If you have a table you want to restore, don't worry about getting it to accurate factory-new condition (and parts availability for older tables can be a problem, a REALLY BIG problem on tables prior to the early 1980s (over 40 years old). Have fun with your project and get it into a condition to where you can enjoy looking at it, playing on it, and bragging to your friends how hard you worked on it.

Before you start on your project: understand that some parts to restore that table have not been available in DECADES. We don't have assembly or engineering drawings. It is all but certain you will need to custom make, fabricate, 3D-print, or cleverly adapt something to work – and it probably won't be cheap – and it might not work on the first try.

As many have found out, a shopping list of parts needed for a "Restoration project" will quickly exceed the price of picking up another disused old table, or two, or more to cannibalize.

COULD YOU SEND A PARTS BREAKDOWN SPECIFICALLY FOR MY MODEL ___ TABLE? Our best available parts breakdowns and tech documentation are here. The VALLEY POOL PARTS BREAKDOWN on this site was updated in 2019 current part numbers and covers about the last 40 years of production. We do not have a parts breakdown that includes tables prior to the roughly 45-year-old Valley Model 27/37/47.

CAN I SEND YOU A PHOTO OF YOUR TABLE SO YOU CAN TELL ME WHAT TO ORDER? We don't like to do this. You have the table right in front of you. We have the schematics at the link shown above, and we offer photos of most of the parts available on the site. We've received angry e-mails because based on our best assessment, we recommended parts that the table owner felt were unnecessary. Or we didn't recommend parts and the owner felt we should now send them free-of-charge or offer free shipping on something else they ended up needing. As a table manufacturer, trying to upsell you needless parts is not at all a profit center for us.

HOW BIG OF AN ISSUE IS PARTS AVAILABILITY WITH OLDER TABLES?
The cover page of the Valley Pool Parts Breakdown on this site and the serial number list are color coded. In Green are models dating back nearly 40 years from the Valley ZD-4 (1986) to present day. Biggest issues will be laminate color availability, corner pieces and coin mechanism parts.

A significant change to the corner structure occurred when the Panther replaced the Cougar in 2010. As discussed earlier – *never, ever assume a cat-logo on a table means it's a Panther*.

Tables from the Valley Model 32 (1982) to the Model 510xxx (1969) are color coded in Yellow. Their coin mechanisms differ significantly from the current tables and not much will be available; but the ball trap and separator will still be fairly similar. The current cushion rails should still work with only minor modifications. The round corner castings are not available, but the angled castings used from 1996 – 2009 WILL FIT TABLES FROM 1973-2009. You'll have more difficulty finding parts, but some current items will still work just fine, and some will require a bit of modification, but will work. Expect to get creative. Remember: these tables are at least 40 years old!!

Tables over 50 years old are coded in Red. They differ greatly from the current tables, and even from the 1970's tables. In nearly all cases, parts specific to these tables were discontinued around 1986— *we have not ordered any of these parts for more than 30 years*-- *we definitely do not have them, don't know who might, and we are 100% sure there aren't any sitting somewhere in the warehouse.* Remember, these tables would be in some cases over half a century old and we stocked repair parts for 20 years after discontinuing them. We no longer have any schematics, exploded drawings or diagrams for tables of this era. Nobody currently employed with Valley-Dynamo has any knowledge of how to repair the pre-1970s tables. All that remain are a few advertising photos – which you can find scans of at our Discontinued products Photo Gallery on Flickr. **It is very, very, *very* unlikely any Distributor has any parts available.**

So, it is important to understand:

- WE NO LONGER HAVE ALL PARTS FOR ALL POOL TABLES WE'VE EVER MADE.
- FOR MANY OLD TABLES, WE MAY NOT HAVE A PART OR EVEN AN ALTERNATIVE IF THE ORIGINAL PART IS NO LONGER AVAILABLE- YOU WILL HAVE TO "GET CREATIVE" TO KEEP A TABLE IN WORKING ORDER THAT IS THAT OLD WITH NO PARTS
- SOMEONE MAY ALREADY HAVE GOTTEN CREATIVE – WE CAN ONLY ASSUME THAT TABLE REMAINS "AS IT LEFT OUR DOCK" AND HAVE NO WAY OF KNOWING IF THERE HAVE BEEN CUSTOM UPDATES
- *WHILE WE COVER CUSHION RAILS IN GREAT DETAIL ELSEWHERE*, USING CURRENT-MODEL 5-BOLT RAILS ON A 3-BOLT TABLE MAY REQUIRE A ONE TIME ENLARGEMENT OF 4 OF THE RAIL-BOLT HOLES ON THE TABLE. 3-BOLT RAILS ARE NO LONGER OFFERED

The VALLEY POOL PARTS BREAKDOWN and photos on our Webstore will answer most of your questions. Most currently available parts are listed and available for purchase.

E-mail the information you have for more help (if available), but we posted these links…

- Valley Serial Number Cross Reference
- VALLEY POOL PARTS BREAKDOWN
- FAQ About Valley Cushion Rails and
- Discontinued products Photo Gallery on Flickr

…because they're the resources we'd use. Most questions on table origin and parts availability will be covered. Additional information is archived and in storage.

C'MON, COULDN'T YOU CHECK TO MAKE SURE YOU DON'T HAVE A _____ STILL AVAILABLE? In the many years since some of these model and color changes, if we haven't completely combed our stock and plundered every sample table we had, we have also moved—discarding a lot of long-discontinued pieces-- several times through the years. If you see an item in the WebStore noted as "while supplies last" it's no joke. Once those parts are sold, we won't stock more, we're thrilled they are gone. It's party time!


Not a photo of our warehouse

We don't mean to be brutal about it, but some folks get seriously ticked off that we no longer sell a coin box or pockets and have no schematics for a sixty-year old model 750A from 1963. They will argue that you can still buy parts for a 1967 Mustang, but the total number of Valley pool tables built over the past 50 years is probably close to the total number of Mustangs Ford builds every year. Also, then and now a Mustang cost a lot more than a Valley Pool table. The pool table industry has no massive aftermarket resource dedicated to keeping old collectibles looking as-delivered new.

I GET IT. YOU DON'T HAVE ____ STILL AVAILABLE, DO YOU KNOW WHO MIGHT? Anything is possible, but it has now been **OVER 30 YEARS** since some of these parts were made. It will be tough to find any still-open Distributor who still has parts purchased that long ago. They clean out their warehouses, too.



DO YOU STILL STOCK THE OLD LOGO PLATES, SO I MAY COMPLETELY RESTORE MY TABLE (SUCH AS THE OLD WINGED LOGO)? Again, it remotely possible but highly unlikely that a distributor may have new old stock but these are no longer available from Valley. The wings logo was last used on the Model 25/35/45 – discontinued in 1977. We've not used any logo plates in over 25 years, when we began stamping the Valley logo into the CORNER CASTINGS.



Someone posts old logo plates on Ebay periodically, not sure if they're new-old-stock or they're just crafty with a 3D printer.

Also, we've seen our logos ending up on tables (and other things) Valley clearly did not build. We know because people send photos asking how old their "Valley" table is, do we have parts for it, the parts they ordered didn't fit…

HOW DO I REPLACE THE WOOD LAMINATES? If you are unsure, ask someone experienced with woodworking or search the web for woodworking tips to find a method that works for you. We basically have a big "computer-controlled cookie cutter for wood" so we laminate wood in complete sheets, cut it to shape, rout whatever holes need routed, and then assemble the table. That obviously won't work at all to remove and replace the laminate on a fully-assembled table. Remember: We are a manufacturer of new tables, not a restoration business



DO YOU OFFER A COMPLETE LAMINATE KIT TO REFINISH A TABLE? Ideally, someone re-doing a table would LOVE for the laminates to be color matched, cut to shape, with all the openings located at the correct spots and nicely beveled as needed; but as noted in the prior section, that's not how we do laminate. Remember, we laminate the *wood*, THEN cut the holes and openings in it. There's no master stack of every possible size of every possible color of laminate on the shelf here, conveniently pre-cut with properly located holes (and if there was, precisely lining up laminate holes with wood holes would be no picnic). When you start adding up the price of new end laminates, and new side laminates, and new top laminates, and shipping, and the labor involved in stripping off every trace of old laminate so the new laminate is nice and flat, and the hours invested installing the new laminate, craftsmanship needed to rout the holes in the proper location for the new laminate, and the various trim pieces and corners that start looking "Not so new" once that new laminate is installed in place… perhaps a new (or at least newer) table with brand new cushions, cloth, and factory warranty might start to make more logical sense?

DO YOU HAVE TOP LAMINATES WITH MARKERS FOR MY TABLE – in the 1980s, Valley went to a top rail laminate with marker diamonds silkscreened on in the proper location based on table size, and then clearcoated.

Proper location of the diamonds is important. This means you CAN NOT order a bigger laminate and cut it down if the desired color isn't available for a smaller table. The diamonds will be in the wrong place.

Starting with the Panther ZD-11 in 2017, we went to a black top laminate with white diamond markers for all coin tables. For replacement parts, this is the ONLY combination available. When a coin table is ordered in a custom color, the tops are black with white diamonds. Whenever we change to the ZD-12, the plan is to keep the top black with white diamonds.

Non-coin Panther table dealers are given the option to have the top laminates color-matched to the table with round inlaid markers, because it "looks nicer". Just be aware that REPLACEMENT TOP LAMINATES ARE NOT AVAILABLE IN THIS STYLE. You may need a complete top-rail replacement.

The laminate is slightly large so you can precisely locate the diamonds. Just like we do when building tables, you'll need to trim it to shape and cut out the center pocket hole.



CAN I GET A REPLACEMENT BOARD SET FOR MY GREAT 8 OR PRO PLUS POOL TABLE?
The Great 8 was replaced in 2010 by the Panther ZD-X, which introduced an all-new electronics package. We stocked Great 8 boards for an additional 3 years until the supply was exhausted (the manufacturer of this board has since ceased operation), **so at this point the board set has not been available for more than 10 years**. We offer the ZD-X Upgrade kit to bring any v7.5, ICT-DBA equipped Great 8 table all the current features, improved battery and charger, and latest software from the ZD-X tables.

Just like if you've been using Windows 7… no manufacturer support. it's time to upgrade.



MY GREAT 8 USES A JCM BILL ACCEPTOR, IS THERE AN UPGRADE KIT AVAILABLE FOR THAT? We supplied a JCM-to-ICT kit for nearly 10 years and continued to do so for 7 years after the ZD-X was introduced, but the kit is no longer available. Even when it was available, the kit cost close to $1000, which is an expensive proposition for a now 20-year-old table. Unfortunately, there are no electronics upgrade options for a JCM-equipped Great 8. An aftermarket conversion kit or operating the table as "push chute only" may be your only option.

DO YOU SELL A KIT TO ADD A DBA TO MY PUSH CHUTE VALLEY POOL TABLE?
No, The Valley Panther ZD-11X and Valley Top Cat tables

- Have an LCD display in the top rail making it far easier to read
- ZD-11X retains full push chute function in case of battery failure/discharge so the table can still be used.

We do not and have never supplied, endorsed or supported any 3rd party DBA kit
This also means before you contact Tech Support when you're having issues with your Valley DBA table, be sure Valley's the one who installed the DBA at the factory.

CAN I ADAPT PARTS FROM THE CURRENT VALLEY GREAT 8 OR DYNAMO PRO PLUS TO USE THE BILL-ACCEPTOR TO WORK ON MY VALLEY LEOPARD FROM THE LATE 1980'S OR DYNAMO DBA TABLE FROM THE EARLY 1990'S? No, only parts shared with current production, non-DBA tables will still be available, although we have posted a guide to the Valley Leopard DIP switch settings.

CAN I GET PARTS FOR A VALLEY LEOPARD OR LYNX WITH THE UNITIZED SERVICE DRAWER (note arrow)? No. The Service Drawer was an innovation that never really took off and was discontinued in 1989. No parts are available and it was so different from the standard Valley ball trap, parts cannot be adapted to work. Only parts shared with current production Valley tables such as the CUSHION RAILS, POCKET LINERS, gulley boots and so forth will be available. Drawings of unique Leopard/Lynx assemblies are available on the site, but again we stress these parts are absolutely no longer available.

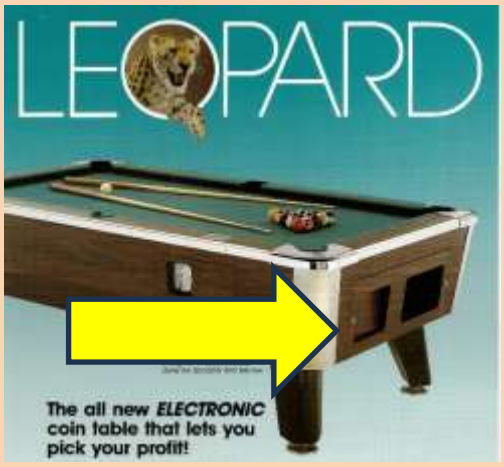

I HAVE AN OLDER MODEL VALLEY BUMPER POOL TABLE; CAN I GET PARTS? Only PARTS FOR THE CURRENT MODEL non-coin Valley Tiger Cat Bumper Pool Table are available. These may not work on older tables. Bumper pool tables were built in smaller batches, and changed more frequently, so documentation and spare parts for the older tables or coin Bumper Pool tables of any model are no longer available.

WILL CUSHION RAILS FOR CURRENT BUMPER POOL TABLES FIT MY TABLE? Many customers have asked so here are the details:

- *All Current Bumper Pool rails are mounted with rail bolts and t-nuts, not wood screws*
- *SIDE rails are 48 1/16" at the widest point, with four bolts spaced 14 1/16" inch apart*
- *END rails are 32 1/16" at the widest point, with three bolts spaced 13 1/8" apart*

Older bumper pool tables had wider cushion rails, our current cushion rails will not fit properly on those tables. Measure carefully to avoid returns. If you are not completely sure these are the correct rails for your bumper pool table, e-mail Techhelp@valley-dynamo.com with your questions. As with all tables, Bumper Pool cushion rails can be removed, freshened with new rubber and recovered by nearly any pool table service professional.



MY POOL TABLE HAS ROUND CORNERS THAT LOOK LIKE THIS PHOTO, WITH THE CAT (not COUGAR or PANTHER, as noted earlier) LOGO, CAN I STILL GET THESE? These corners were discontinued from production in 1996. While we continued to stock them as parts, the tool to make them finally gave out in 2007 after nearly 30 years of service, and unless we charge about $500 per corner we will never recoup the cost of having a new tool made. The CPYOOTRA30301 Corner Casting will fit most non-Panther tables from 1973-present, and will cover the down corner, though obviously will not match. Panther corners WILL NOT fit Cougar tables.

DO YOU KNOW ANY DISTRIBUTORS WHO MIGHT HAVE THE OLD CORNERS IN STOCK? It's been at least 10 years since we last sold any, it's impossible to say if anyone might still have them. You could always try to find an Operator with an old table they're willing to part out.

HOW COME YOU DON'T OFFER CHROME CORNERS ANYMORE FOR OLDER-MODEL TABLES? Quality issues, and because it's not been used daily on the production line for 10 years so we go through MUCH fewer of them, and that chrome plating is a lot more expensive to do than ever

before due to environmental concerns. Starting in early 2023, all CPYOOTRA30301 corners are silver powdercoat.

THE FLUSH MOUNT CORNERS ON THE VALLEY PANTHER TABLES LOOK REALLY NICE, CAN I INSTALL THEM ON MY OLDER MODEL TABLE? Allowing flush-mounted castings meant dramatic changes to the top rail attachment method. This means that the Panther and ZD-7 Angled CPYOOTRA30301 castings are NOT AT ALL compatible with each other and you cannot mount one on a table designed for the other.



WHY DO YOU ONLY SELL THE 3" POCKET LINERS? MY TABLE CAN ONLY USE THE OLD 4" LINERS. When we used the longer pocket liners on the line 30 or more years ago, we actually trimmed them down to the shorter size. The 3" deep pocket liners have been all we've used for *decades*. The pocket liner has two jobs. 1 – to keep the ball from hitting the corner casting (same basic dimensions for close to 50 years) or side wood of the table. 2- to direct the pocketed ball into the gulley boot for return to the separator. The pocket liner is as long as it needs to be. If the pocket liner were longer, how would that help? How would it improve play? Would you know the difference? The pool table really doesn't care and functions just the same. Just use the 3" liners, you'll be fine!

DO YOU STILL HAVE THE SPIRAL NAILS YOU USED TO USE TO SECURE THE POCKETS? We have not used spiral pocket liner nails in production since 1992. We stocked them for 20 years after that but stopped carrying them in December 2012.



DO YOU HAVE ANY OF THE SIDE TRIM WITH FEWER OR NO GROOVES?
The "old-style" trim prior to the new Panther flush-mount trim is the same extrusion as used in the past and should fit tables going back about 40 years. It just looks a little different, with 11 horizontal grooves. The more grooves you have, the less obvious the occasional scratch will be.

HOW COME THE HOLES IN THIS SIDE TRIM DON'T MATCH UP TO MY TABLE?



We had kept the screw holes in the same place for many, many years but we've allowed movement on their placement for two reasons. First, to keep costs down. It's unnecessary to demand precise placement of these screw holes because second: by occasionally drilling new mounting holes, the trim can be attached more securely to the table and not reusing the same screw holes for decade after decade. Let's be realistic: even the pickiest league player should never have reason to say: "You drilled extra holes to mount the trim; this table is no longer factory original. Naughty naughty." Drilling a few extra trim mounting holes will only affect its value in the eyes of the most ultra-picky would-be collector (seen at right).

I WANT TO MOVE MY TABLE, HOW DO I DO IT AND DO I TAKE IT APART? Be careful: **POOL TABLES ARE VERY HEAVY**. Always overestimate how many people you will need to move your

table. Many of our distributors can assist with moving tables. They may provide the service or be able to refer you to an experienced and capable mover.

The legs on our tables are removable and should be removed during the move. The one-piece slate alone is close to half your table's weight and very likely to be damaged if it comes loose during the move. You should remove it and move it separately. (first remove the metal trim around the sides of the table, then the bolts holding the cushion rails and the slate should lift out relatively easily, if heavily. More detailed instructions are posted here).

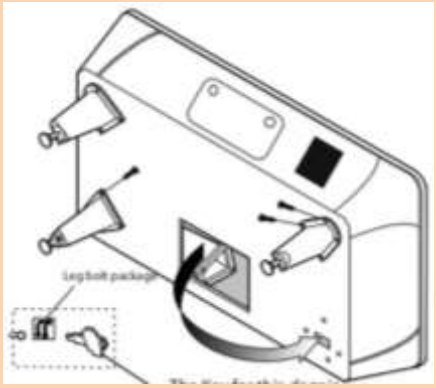

On more recent tables, you'll find helpful hand-holds once the legs are removed and a cavity inside the table to store the legs for transport.

For two reasons, disassembling a coin operated table any further is very risky, and your table is unlikely to ever be the same—if you can reassemble it afterwards at all.

1) Our tables are built with threaded nails and structural adhesive (fancy name for "wood glue"). It helps make them awesomely sturdy but will require a lot of effort and work to take apart. Also, any threaded nail will leave a larger hole than it made going in.
2) The ball return system relies on precise alignment for proper function. Disassembly and reassembly may result in just enough misalignment to cause problems.

Regarding the actual move:
ALWAYS move the slate on its side and cushion it as well as possible. One hard bounce and that slate *absolutely will* crack. Then getting the table to point B is no longer your biggest problem,

ALWAYS TRY to move the table on its side as well with the ball view door opening facing UP (see the illustration). This puts the strongest (no openings) side of the table down for a solid base. For non-coin tables without a ball view door, just move it on a side. Flat is OK if you have the room AND AS LONG AS THE SLATE IS REMOVED.



WHAT KIND OF CUE BALL DO I NEED? Since September 8th, 1965 (that's over 57 years) Valley tables use and work best with a standard-sized 2¼" magnetic cue ball (an oversized 2⅜ cue ball—which we do not sell-- should also work)

NO VALLEY TABLE HAS EVER BEEN BUILT WITH A SEPARATOR ENGINEERED FOR A WEIGHTED CUE BALL.

We use the VALLEY DURAMITH CUE BALL BY ARAMITH in new tables (you can click the link to purchase it). It is a 2¼-inch perfectly balanced magnetic cue ball with our cat logo in purple, improved to be less susceptible to chalk stains than our green-logo cue ball (discontinued March 2013).

CAN I PURCHASE AN ENTIRE SIDEWALL OF A TABLE? A question usually asked after flooding affects a widespread area. As noted in the chapter on disassembling a table to move, these parts were never designed to be removed because the tables are held together with wood glue and

spiral nails. A table in bad enough shape to where you are considering replacing an entire sidewall may be a lost cause. Salvage the slate and look for a good table with a bad slate.

WHAT LAMINATE COLORS ARE CURRENTLY AVAILABLE? Our tables have come in a very wide variety of wood shades over the years but only the COLORS FROM OUR POOL DOOR SUMMARY (covering approximately 20 years of production) are currently available.

If you want to restore a table in a different color, or get a laminate made to match what is currently on your table, we suggest contacting a cabinet refinisher. They normally have a vast selection of possible laminates to choose from.

Provided here only for your reference: these colors are discontinued and no longer available at all. Seriously, except for the little swatches we scanned here we have NOTHING in the building in these shades, and no plans to get any. Your Distributor may have old stock available, but if not they cannot call us to order more. Tell them so, that you saw it plain and clear on the FAQ page of the Valley-Dynamo website.



Some **DISCONTINUED** Valley laminate colors no longer available, from left to right
"TAJ TEAK" Valley ZD-7 1996-2001
"SUMMIT ASH" Valley ZD-6 1994-1996
"SABLE MAPLE" Valley ZD-5 1991-1993 (close to the available ZD-11 "Highland Maple")
"CLASSIC MAHOGANY" Valley ZD-4 1986-1991(close to the available ZD-8 "Jewel Mahogany")
"BIRDSEYE MAPLE" Valley Cougar model 49/39/29/19 – 1979-1982
And you can check our "Discontinued Products section" for photos of old tables all the way back to 1959.

CAN I GET A REPLACEMENT VALLEY COIN DOOR OR PARTS FOR THE COIN MECHANISM? Few areas of our tables have seen as much change as the Coin Door area. For over 30 years of Valley tables (since the ZD-4 - 1986 to present), the coin door is 10 3/16" wide by 8 ¼" tall. The Current Coin Door , a complete door assembly with Push Chute and the current coin door with no Push Chute opening are available in our Webstore.

The coin door available immediately prior to that door was discontinued for a number of years but Plain black coin doors for the Model 22/32/42 and Model 19/29/39/49 that measure 9¾" x 7" can be found in the WebStore. Measure your door prior to ordering!! Please note: the metal "Z-Brackets" for these doors have not been stocked for over 20 years so you will need to save yours or find a substitute.

Most coin mechanism housing parts specifically for tables prior to the ZD-4 (at least 36 years old) are discontinued.

SOME REALLY OLD COIN MECHANISMS LOOK LIKE THIS PHOTO, CAN I STILL GET SOMETHING LIKE IT?
Monarch Coin produces an "old look" coin chute, called the Model 444. You don't have the price flexibility of a modern push chute, but you get the old-style look.



HOW CAN I CHANGE MY COIN-OP TABLE TO FREE PLAY? CLICK ON THIS LINK FOR COMPLETE INSTRUCTIONS WITH PHOTOS.

Another option on any table may be to disable the Push Chute Trap by removing it entirely, or rigging it to stay in the up position. This way, the balls will simply roll through the trap without stopping and into the collection box. It is no more difficult than putting blanks into the push chute, but E-mail Valley Dynamo Tech Support for the procedure, to make sure it is done correctly.

It is tempting to modify the table so you can simply reach in and trip the trap to release the ball without using the push chute. Remember: many older coin mechanism parts are no longer available, so if those parts are modified, damaged, bent, warped, lost, stolen, eaten, misplaced, removed, buried or discarded, it may be impossible to ever restore the coin mechanism. If you remove any pieces, save them. There should be plenty of storage space available in the cavity of the table.

LET'S TALK KEYS

COULD I GET A KEY FOR MY OLD COIN DOOR?

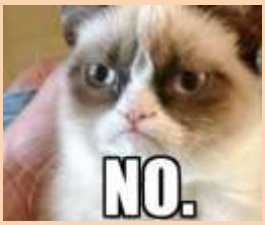

That one is a true absolute. Grumpy Cat's not playing around. No further information needed, no questions, no arguments.

For the owners' security, all Valley coin doors are randomly keyed and there is no "universal" key. We keep no records of what key a table was sent with, and we stock no coin door keys. To replace the lock, you can purchase a coin door lock at this link or from almost any supplier in the vending/game industry. Best estimates are that we use between 40 and 50 differently-keyed coin door locks mixed up in a box. A batch of matching coin locks would be an all-day job we just do not have the resources for. Not at $14 a lock.

COULD I GET A KEY FOR MY BALL VIEW DOOR OR CLEAN OUT DOOR? Keys may be available for tables built within the last 20-25 years if (and this is a BIG if) NO PRIOR OPERATOR CHANGED THE LOCKS (*Operators frequently change the locks to keep shady characters from buying factory-issue keys for the factory-issue locks and playing unlimited free games on their tables*) and secondly, if we are absolutely certain we were using the standard lock the day of production and not a substitute. Please try not to get too irritated with us for not knowing exactly what lock is on your table or not carrying a key for the lock. It's anyone's guess what lock an owner, operator, or location chooses to install in their table at some point between when it left our facility and when you got it. For tables more than about 20 years old, key availability gets even less certain because we used different lock suppliers.

Now *because* we don't know this, in 99 cases out of 100 you are better off with the minor expense of replacing all the locks with a "known" lock than the major inconvenience of a lot of back –and-forth key shipments. Locks and keys can be purchased from your parts distributor or most vending suppliers, locks are available in the Webstore, and none are that expensive. **The only way replacement locks won't be cheaper than a Locksmith is if you are a Locksmith, are very good friends with a Locksmith, or a Locksmith owes you big favor**.

Please be aware that ordering a single lock or key will total well below the WebStore minimum, and all keys are considered final sale items - no refunds or returns are permitted.

YOU DON'T HAVE SLATES OR CENTER CHUTES ON YOUR WEBSTORE, HOW CAN I BUY ONE?

New pool tables with better features have resulted in many Distributors and Operators storing old tables or taking them in trade. In many cases, these tables have many scratches, stains, missing parts, and are often seriously used up. Any new location this Operator gets won't want that nasty old thing; but the slate is intact. And it just got a little easier because similarly-sized Valley and Dynamo tables use the SAME SIZE slate – and while we're not sure about all the competitors out there, odds are good many of them use identically-sized slates. You could possibly negotiate the part-out or outright sale of one of these older tables for considerably less than the price of purchasing (about $1000) and shipping (depends on distance, and if you have a dock or we need to arrange a lift truck) a new slate to you.


Crated slate ready to travel

And if you're transporting a slate: **Slates MUST stay on their side during shipping (note photo, as well as the portion earlier about moving your table)**. A slate shipped flat will almost certainly crack on the first big bounce.

Finally, some of our Distributors have purchased and stocked slates so the shipping expense could be a lot less if picking one up locally. Locate a Distributor here.

Also important: we are a Pool Table Manufacturer - which is what keeps the lights on and the doors open. Slate orders are treated as low-priority and have been known to take 6 to 8 weeks because the line works slate orders as the table production schedule permits. We will not stop table production because you need a slate for a 40-year-old table ASAP, like NOW!! If you need a slate **absolutely right now**, the buy-the-old-table-and-pull-one idea is the much better option.

For every slate sold, we usually get 10 requests for a "quote for insurance" – and upon settlement the person getting the quote probably does as we suggest and poaches an intact slate from an older table they got on the cheap (exactly as we recommended above)**. We sure don't hear from them. Not wishing to be an accomplice to possible Insurance Fraud, company policy is we provide no slate quotes for insurance purposes other than the "about $1000 plus shipping" as stated above. Print/screenshot that and show your insurer.**

Nearly everything here applies to Center Chutes as well, except they weigh less, are found only in Valley tables, and will cost just over $600.00 delivered, and the center chute in the old table may need cleaning.

COULD I BUY A USED SLATE (or other item)? As an original equipment manufacturer, we **rarely if ever** have any used parts in our warehouse. We build new products and warehouse them only long enough to ship them to Distributors for sale (this means we NEVER have "used tables" in stock, ever). On a few occasions we may have BRAND NEW closeout, overstock, or parts that did not meet our high quality standards but are likely good enough for a restoration project. To see what we currently have available, check our VALLEY FACTORY OUTLET area.

WHERE ARE ANSWERS TO QUESTIONS ABOUT CUSHION RAILS? We've started a separate document for that. YOU CAN GET TO "FAQ ABOUT CUSHION RAILS" BY CLICKING THIS LINK.

ABOUT BRUNSWICK POOL TABLES: **FOR A FEW YEARS** Valley Dynamo was a division of Brunswick and marketed a Bill Acceptor-operated pool table called the Brunswick Metro Coin styled to resemble Brunswick's Metro model. Brunswick commercial tables (other than the Metro Coin) and home model tables were engineered and built separately from Valley-Dynamo products and the parts were never designed to be interchangeable. For service on your Brunswick Pool table, contact 800-336-8764 to find a Brunswick dealer.

We were also briefly owned by Kidde, but we do not have parts for any of their smoke alarms or fire extinguishers.

DO YOU HAVE PARTS FOR THE BRUNSWICK METRO COIN? The electronics on the Metro Coin are fully compatible with our current generation of DBA tables, so the ZDX Upgrade kit works there as well. Once Brunswick sold our company over 10 years ago, we were no longer permitted to stock and sell the exterior parts, which were very much in the Brunswick style. Also, we no longer stock the Metro 4-bolt rails as they were TOTALLY different from the Valley rail design. Metro rails can be refreshed with new rubber and cloth on the existing backing by nearly any pool table professional.

DO YOU HAVE INFORMATION OR PARTS FOR AN OLD POOL TABLE MADE BY ------- ?
WILL YOUR PARTS FIT A TABLE MADE MY -------?
We receive a lot of questions from customers who have located an old coin-operated table by a manufacturer they cannot locate or has long since gone out of business. Irving Kaye tables generate a few requests because they closed around 40 years ago, and folks looking for their information should check out this comprehensive site dedicated to their history. We are the manufacturer of Valley and Dynamo tables, we only stock parts known to work in Valley or Dynamo products and are not a full-line supplier of parts and accessories. Some other manufacturers have gone to great effort to make their tables different; others knew a good design when they saw it and tried to copy it. Someone may cleverly be able to adapt our parts for use elsewhere (they also have access to "elsewhere" to help with that), but we make no guarantees.

Some customers assume that we bring in other manufacturers' vintage and out of production pool tables just to see if our current parts fit and work on them. **We do not do this**.

A recent incident. An overseas customer sent in a photo of a clearly-not-Valley-or-Dynamo table.
"We want to buy some cushions."
"Our cushions will never work on this table."
After which they'd called and left repeated voice mails wanting to discuss the cushions. To go back to Page #1 of this very document: "we have a small staff kept busy with the manufacture and shipment of new products"

Google, Yahoo and Bing are your friends…



There was a less-recent incident where a customer bought one of our cushion rail sets thinking he could adapt it to a "no longer in business third party" table—against our advice. He damaged them in the process, and then got pretty testy when we would not exchange them for good cushion rails. Sort of an "I broke these trying to modify them to make them work in a way you never intended, now I think I know what I did and want to try again, why won't you replace this set I broke at no charge to me?" situation. He actually asked "Don't you stand behind your product?" Yes, *seriously*, we were asked "Don't you stand behind your product?" after this.

Because of that, checkout terms now say "We reserve the right to refuse orders."

What's funny is we actually know when someone is trying this, it usually starts with calls or e-mails from 3 or 4 dealers or distributors all asking if our parts work on "Brand X" table. We recite to them basically this entire section word-for-word to pass along to the customer, but it usually happens over and over until the customer eventually contacts us to get the Definitive Answer firsthand. Or worse, the customer calls us first, and then calls Dealers expecting that answer to change.

WITH ONE EXCEPTION we have no service information, documentation, advice or parts for competing products. It's like shopping at the Volkswagen parts counter for your Yamaha ATV or propane fork lift because they both have 4 wheels and a motor. Or "Do you have any fuel pumps that work on an AMC Gremlin?" The VW engineers in Wolfsburg Germany aren't dragging in old Gremlins wondering "Vee shall zee if zees part fits."

The one exception is from the folks at VENTURE. Had a nice chat with them where they explained that when developing their pool tables in the mid-1990s, they benchmarked the Valley pool table and MOST of the internal functional parts as well as the cushion rails should be interchangeable with Valley parts (bearing in mind older Valley tables require slight modification to use the current model of cushion rails). They were very cooperative and helpful, and we said we'd speak well of them on our FAQ page...

Now we have never, EVER had a Venture table in here to confirm this and have no plans to. There are no returns or credits offered if our Valley part did not fit a Venture table – we have never checked firsthand to confirm it does. There is no "You guys said it would work on a Venture." "No, no, no, no, *VENTURE* said it would work on a Venture."

Google, Yahoo and Bing are your friends…

To summarize, the critical things to know and never forget:

- We are a manufacturer of new tables, not a restoration business
- We sell a few parts on the side, we are not a parts business that builds a few tables
- The "After it leaves our dock" rule
- All Panthers are cats, but not all cats are Panthers
- Not all BARS are the same, not all BAR BOX pool tables are the same

CAN I ORDER FROM YOUR WEBSITE? The WebStore is open to all US customers (including Alaska, Hawaii, Puerto Rico and other US Territories – please read the terms at checkout regarding orders and Priority Mail), and to Canadian customers who understand that we may need to reevaluate freight charges prior to shipment. For other International customers, you might check to see if there is a Dealer in your country. Otherwise, contact parts@valley-dynamo.com **(it is often a TREMENDOUS help to us and can be of great savings to you if you have your own FedEx, UPS or DHL account for the shipping charges and applicable duties and taxes – and because it's AGAINST THE LAW we ABSOLUTELY DO NOT send customs paperwork with artificially-low pricing to save on duties and taxes.)**

I AM A DEALER OR OPERATOR WHO ALREADY HAS A VALLEY-DYNAMO ACCOUNT; CAN I PLACE MY PARTS ORDERS ON YOUR WEBSTORE? Absolutely!! And if you have terms, you can even order with a PO. Contact the Parts department to obtain a password to order online using your account. Periodic orders will be necessary to maintain a working login, and an order history is desired if you're requesting a login so we can see how often you purchase from us.

OUR GOAL IS BETTER PRICING AS A REWARD FOR REPEAT AND REGULAR BUSINESS.

Past history notes that the more urgent you act to get a login, and the more you claim to be a large operator with tons of tables. If you order $200 in parts once a year, you're unlikely to get set up with discounted pricing.

WHEN CONTACTING VALLEY-DYNAMO. E-mails with no title, unsolicited e-mails with enormous attachments, any e-mail with a credit card number, or an e-mail copying every available address, WILL NOT get through the Spam filter. And if it does, our IT guy recommends we delete the e-mail without opening it. Always title your e-mail, e-mail only the most appropriate party, and contact us first prior to sending large attachments such as photos. If you must attach a photo, know that when the full-size photo is opened in MS Outlook it's like 44" wide, so it's OK to send a smaller photo. Better yet, send a link to where you have a photo posted. And never send e-mails or leave voice mails simply asking us to call you – it's unlikely to happen. "Small staff tasked with building and supporting new tables" and all.

Plus there's an annoying tendency for us to call someone, get voice mail, leave a very detailed message with instructions, and seconds later pick up the phone "Did you just call me?" "Yes, did you listen to my very-detailed voice mail?" "You left voice mail?" A pet peeve of mine, but they won't let me just hang up on people who do this.

If you have reached this point, having looked all the way through the 20 pages of Frequently Asked Questions-- and still could not find the answer you seek (we'll know if you ask a question that's covered here and will respond with a link to where it's covered and maybe a screen shot – the guy who wrote this is the one who gets the e-mails), click on this link to contact us